Current part is item (3) on diagram. Available at www.oshkoshequipment.com


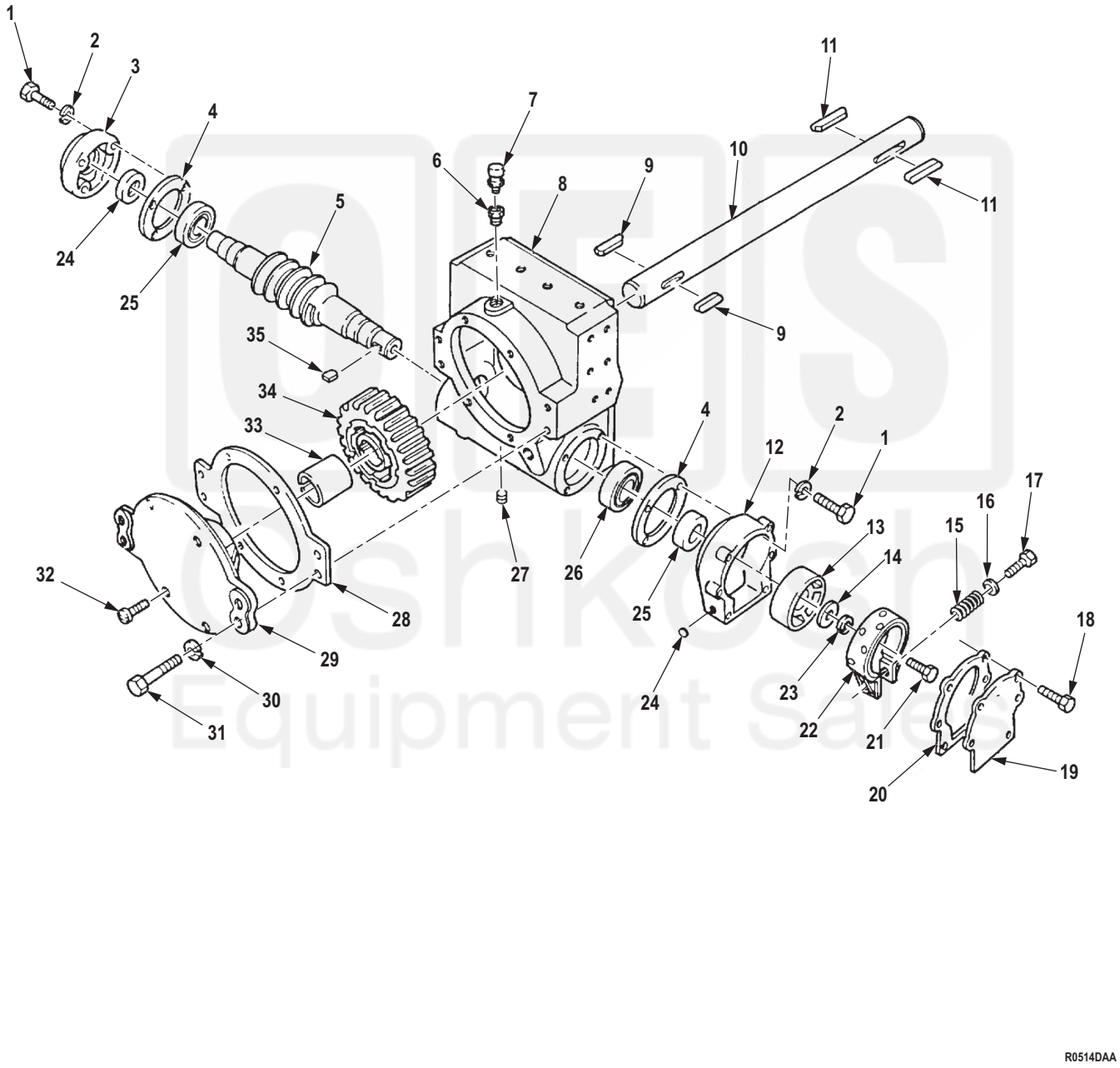


Figure 497. Front Winch Basic, Gear Case and Related Parts.


Current part is item (3) on diagram. Available at www.oshkoshequipment.com

Current part is item (3) on diagram. Available at www.oshkoshequipment.com


| (1) ITEM NO. | (2) SMR CODE | (3) NSN | (4) CAGEC | (5) PART NUMBER | (6) DESCRIPTION AND USABLE ON CODE (UOC) | (7) QTY |
|---|---|---|---|---|---|---|
| | | | | | **GROUP 2001 HOIST, CAPSTAN, WINDLASS, CRANE OR WINCH ASSEMBLY.** | |
| | | | | | **FIG. 497. FRONT WINCH BASIC, GEAR CASE AND RELATED PARTS.** | |
| 1 | PAHZZ | 5305-00-071-2070 | 80204 | B1821BH050C175N | SCREW,CAP,HEXAGON H<br>UOC: DAD,DAF,DAH,DAL,DAX,V14,<br>V16,V18,V19,V21,ZAB,ZAD,ZAF,ZAH,ZAL | 8 |
| 2 | PAHZZ | 5310-00-003-4094 | 80205 | MS35338-48 | WASHER,LOCK<br>UOC: DAD,DAF,DAH,DAL,DAX,V14,<br>V16,V18,V19,V21,ZAB,ZAD,ZAF,ZAH,ZAL | 8 |
| 3 | PBHZZ | 3110-00-740-9809 | 61465 | 305319 | PLATE,RETAINING,BEA<br>UOC: DAD,DAF,DAH,DAL,DAX,V14,<br>V16,V18,V19,V21,ZAB,ZAD,ZAF,ZAH,ZAL | 1 |
| 4 | PAHZZ | 5330-00-057-3823 | 19207 | 7409822 | GASKET<br>UOC: DAD,DAF,DAH,DAL,DAX,V14,<br>V16,V18,V19,V21,ZAB,ZAD,ZAF,ZAH,ZAL | 2 |
| 5 | PAHZZ | 3040-00-231-0219 | 19207 | 7954478 | WORM SHAFT<br>UOC: DAD,DAF,DAH,DAL,DAX,V14,<br>V16,V18,V19,V21,ZAB,ZAD,ZAF,ZAH,ZAL | 1 |
| 6 | PAHZZ | 4730-00-202-6670 | 81348 | WW-<br>P-471BDQBUEA | BUSHING,PIPE<br>UOC: DAD,DAF,DAH,DAL,DAX,V14,<br>V16,V18,V19,V21,ZAB,ZAD,ZAF,ZAH,ZAL | 1 |
| 7 | PAHZZ | 4820-00-726-4719 | 19207 | 5196397 | VALVE,VENT<br>UOC: DAC,DAD,DAE,DAF,DAG,DA<br>H,DAJ,DAL,DAW,DAX,V14,V15,V16,<br>V17,V18,V19,V20,V21,V22,V24,ZAA,<br>ZAB,ZAC,ZAD,ZAE,ZAF,ZAG,ZAH,Z<br>AJ,ZAL ..... | 1 |
| 8 | PFHZZ | 3040-00-405-1931 | 19207 | 7954484 | HOUSING,MECHANICAL<br>UOC: DAD,DAF,DAH,DAL,DAX,V14,<br>V16,V18,V19,V21,ZAB,ZAD,ZAF,ZAH,ZAL | 1 |
| 9 | PAHZZ | 5315-00-281-7652 | 19207 | 8327444 | KEY,MACHINE<br>UOC: DAD,DAF,DAH,DAL,DAX,V14,<br>V16,V18,V19,V21,ZAB,ZAD,ZAF,ZAH,ZAL | 2 |
| 10 | PAHZZ | 3040-00-921-0478 | 19207 | 7954473 | SHAFT,STRAIGHT<br>UOC: DAD,DAF,DAH,DAL,DAX,V14,<br>V16,V18,V19,V21,ZAB,ZAD,ZAF,ZAH,ZAL | 1 |
| 11 | PAHZZ | 5315-00-281-7650 | 19207 | 8327443 | KEY,MACHINE<br>UOC: DAD,DAF,DAH,DAL,DAX,V14,<br>V16,V18,V19,V21,ZAB,ZAD,ZAF,ZAH,ZAL | 2 |
| 12 | PAHZZ | 3040-00-118-5554 | 19207 | 7954475 | HOUSING,MECHANICAL<br>UOC: DAD,DAF,DAH,DAL,DAX,V14,<br>V16,V18,V19,V21,ZAB,ZAD,ZAF,ZAH,ZAL | 1 |
| 13 | PAFZZ | 2530-00-740-9817 | 61465 | 307120 | BRAKE DRUM<br>UOC: DAD,DAF,DAH,DAL,DAX,V14,<br>V16,V18,V19,V21,ZAB,ZAD,ZAF,ZAH,ZAL | 1 |


Current part is item (3) on diagram. Available at www.oshkoshequipment.com